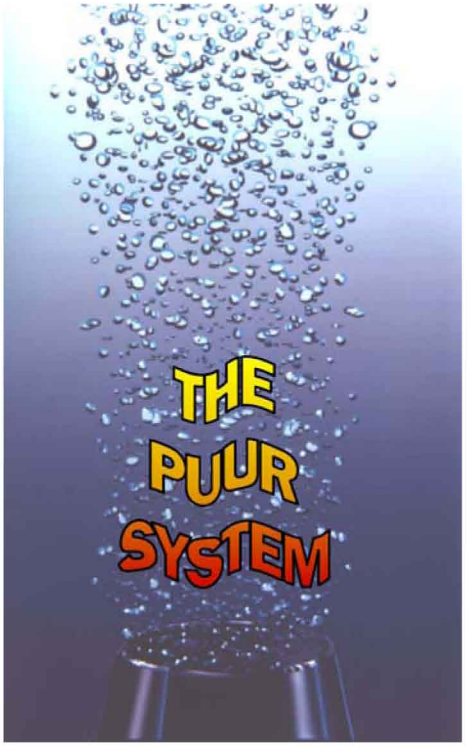

Date: 06/23/05

Customer Focus

The Puur Gas Injection System

The Purr system is composed of a 90% alumina non-wetting refractory that is permeable. The permeability is precisely controlled in order to allow the sparging gases to flow through the controlled porosity of the plug and subsequently into the molten aluminum but **not** allow metal penetration back into the plug.

There are many gas injection technologies on the market. Each technology is attempting to manufacture as many small bubbles as possible in order to affect the following benefits:

- Degassing (removal of hydrogen)
- Thermal and chemical homogenization
- Fluxing e.g., removal via chlorine gas of sodium, magnesium or calcium
- Increase melt rate
- Improve thermal loading (more effectively use the Btu's from the burners)

Spar, Inc.
PO Box 909
917 Francis St. West
Jacksonville, AL 36265
256-435-9342

Advantages

1. **No moving parts to repair or replace.**
2. **Significantly lower initial capital outlay.**
3. **R.O.I.'s are usually realized within 12 months.**
4. **Less time required to achieve alloy chemistry.**

SPAR, Inc.
Refractory Specialists

Background

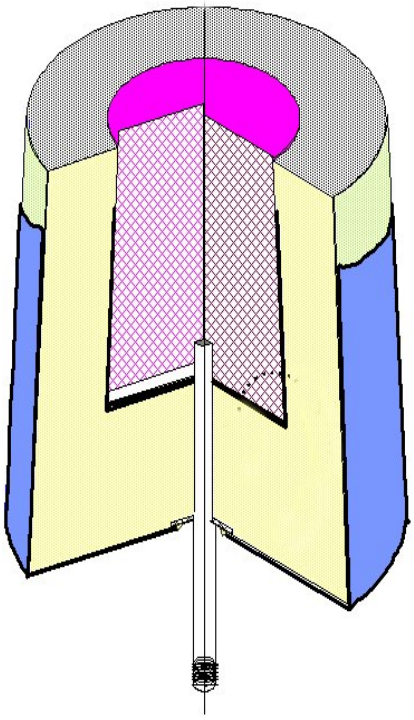

I developed the technology in 1982 and put my first porous plugs into a small die cast furnace pouring pistons for Ford Motor Company. The theory worked but we found out that we needed more porous surface area to maximize the number of small bubbles. I went from a 3.5” to 10.5” diameter porous surface , effectively increasing the surface area by nine fold. From this small start I went to degassing aluminum via an in-line box at a major foil operation. With the cooperation of this patient customer I learned the corrosive nature of chlorine and just how quickly chlorine can eat the mild steel can off a plug (less than a day)! I have subsequently gone to inconel cans for chlorine applications. I mention these two stories to convey the fact that I have learned a lot about degassing aluminum via porous plugs due to the fact that I have made most of the mistakes.

In 1989 I got my big break and was able to install porous plugs in large holding and melting furnaces for Reynolds Metals Company. The company has since changed ownership, its new name is Wise Metals but they still utilize the technology in 220,000 lb. tilting and round top charge melters.

My next break came in 1996 with the placement of porous plugs in Hydro Aluminum’s furnaces in Norway. The success at Hydro spread throughout Europe with installations in Sweden, Germany, Italy and Greece.

Applications

Round Top Charge Melter

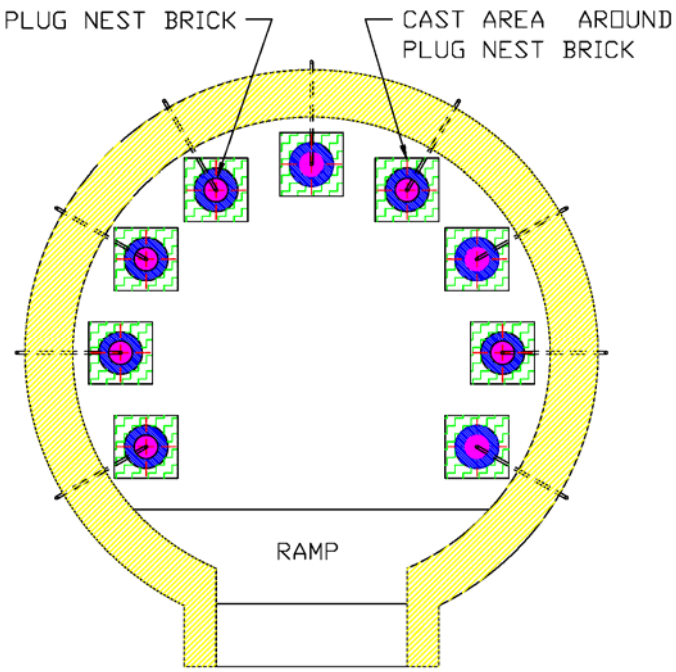

Reasons For Using The Technology

1. Pre-treatment of the metal.
    - Hydrogen levels decreased from 0.34 to 0.24 ccH_2/100g Al.
2. Increased melt rate.
    - Approximately 18% improvement in melt rate.
3. Elimination/Reduction in truck stirring.
    - 50-100% reduction in truck stirring after installing porous plugs.
4. Reduces the time required to get a heat ready to tap.
5. Reduce the time required to achieve a flat bath.
    - Flat bath has been achieved in 30% less time due to agitation from the bubbles.

Holding Furnaces

Reasons For Using The Technology

1. Degassing
    - Typically the hydrogen concentrations are reduced by 30-50%.
2. Thermal Homogenization
    - The graph below shows the effectiveness of the plugs to nearly eliminate thermal stratification in as few as 5 minutes.
3. Eliminate thermiting dross due to more efficient utilization of the chlorine portion of the sparging gas.
4. Dramatically reduce the amount of chlorine concentration in the sparging gas.
    - Typically it can be reduced to 5-10% for critical alloys such as can stock.
5. Slash chlorine emissions
    - Over 90% reduction in chlorine emissions can be achieved versus lances.
6. Dross Savings
    - Wise Metals the former Reynolds Metals Co. reduced their dross generation by 32% when they switched from lances to porous plugs.

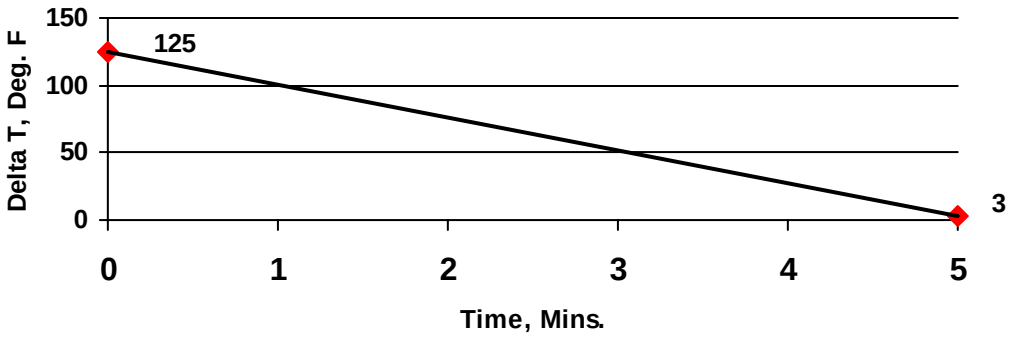

In-Line Boxes/Troughs

Reasons For Using The Technology

1. Remove hydrogen in the metal via an in-line degassing trough.
    - Typically the hydrogen can be reduced by 20-40%.
2. Small amount of aluminum to flush if you have numerous alloy changes.
3. Inexpensive compared to the numerous rotary or tangential gas injection systems.

Ladles

Reasons For Using The Technology

1. Effective degassing system as compared to rotary systems.
2. Dramatically lower initial capital outlay for the plug system compared to rotary's.
3. No maintenance personnel required to service The Puur System.
4. No consumable rotors or shafts to replace.

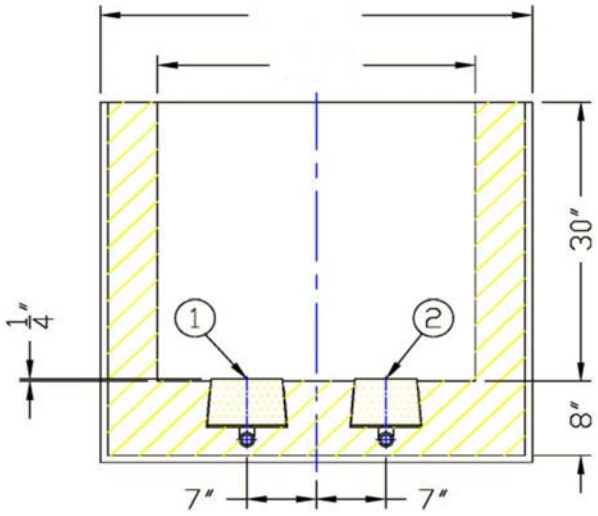

CROSS-SECTION

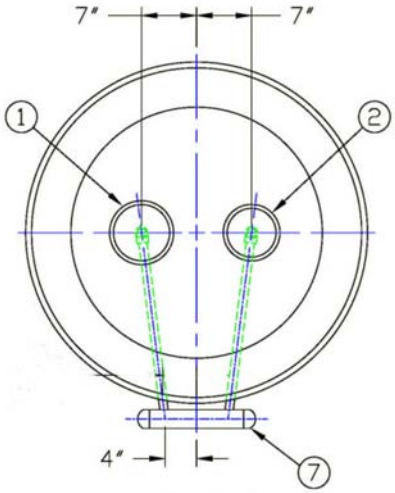

PLAN VIEW

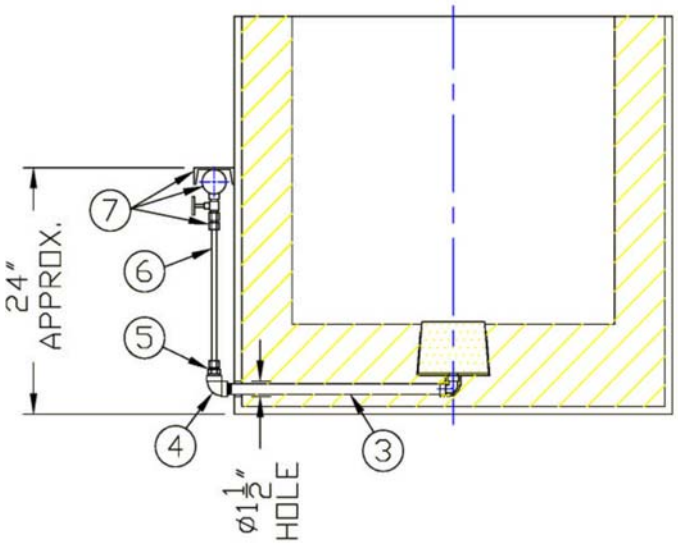

CROSS-SECTION

Plug Installation
Tilting Furnace

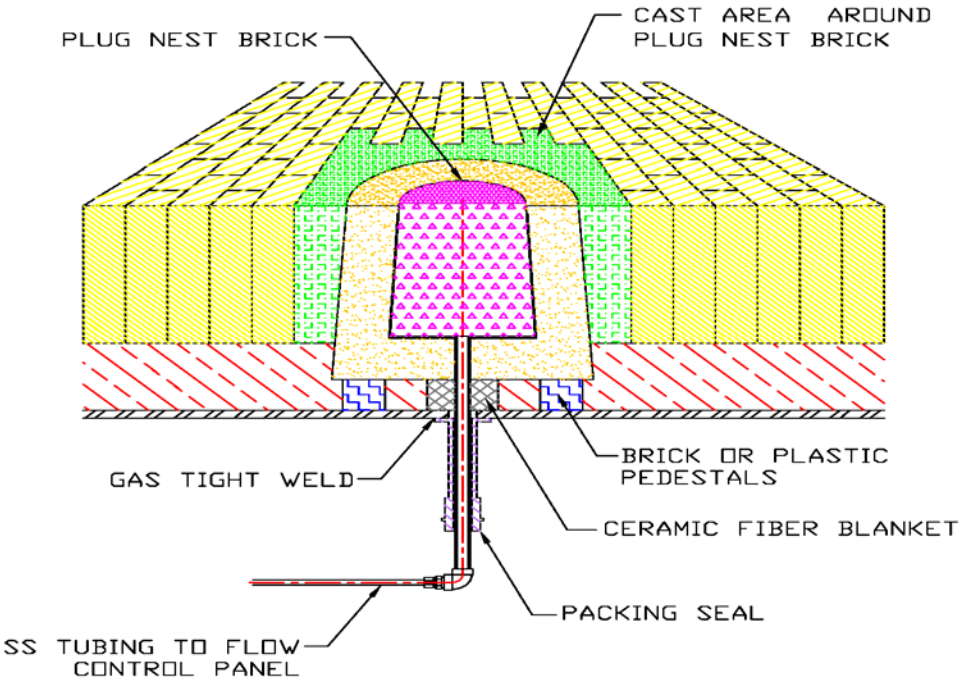

Plug Installation
Stationary Furnace

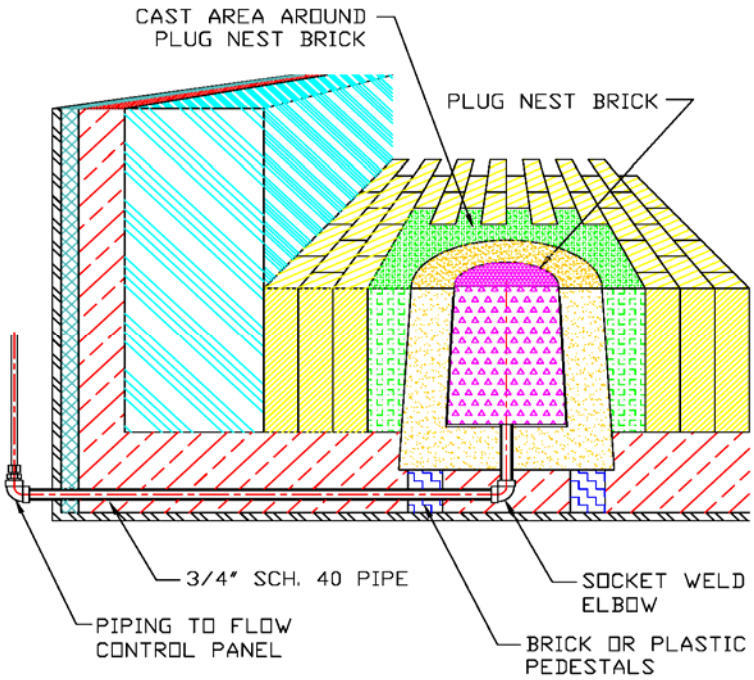

Flow Control Systems

In order to assure that the porous plugs will perform their job they must be backed up by the proper piping and flow control system! The biggest fear a customer has is that his plugs will blind over and thus cease to provide the benefits he paid for. The key to making sure this doesn't happen is to have the correct piping materials, qualities and arrangement as well as a PLC or timer based flow control system.
Every furnace is different, some furnaces have a tendency to form voluminous amounts of dross on the floor while others stay relatively clean. If the floor has heavy sludge deposits then it is imperative that the plugs be monitored to assure their openness. We have developed equipment and work with local PLC experts and programmers to provide software that continuously checks the plug's flowability. If the plug doesn't pass a set criteria then the suspect plug is isolated and purge burst at high pressure in order to clear it. This process is repeated until the plug clears or if it doesn't after a set number of bursts an alarm sounds to notify the operators to perform a hot cleaning of the furnace floor.

Gas Tightness

We have developed a packing seal system that assures that no chlorine will leak from underneath tilting holding furnaces. The photos on the left show the original pipe coming from the plug/nest brick assembly and the packing seal being installed over the gas feed pipe.

What Do We Need In Order To Provide You With A Puur System Proposal?

1. Engineering drawings of the vessel.
2. If the vessel is a furnace we will need both refractory and steel drawings.
3. If drawings are not available then we need hearth dimensions (length, width and thickness). If the hearth is sloped, then we need to know the slope as well as the direction of the slope.
4. Can the plugs be piped underneath the furnace or do the pipes need to be buried in the subhearth?
5. Will the hearth be cast or bricked?
6. If the vessel is a trough or in-line box we will need to know how large of a foot-print we have to work with in the casting pit? We will need to have cross-sectional views of the existing troughing with flange and bolt hole arrangements.
7. If the vessel is a ladle can the piping be run underneath the ladle or must it be piped inside the ladle?
8. What gas or gases will be used and in what proportion?
9. Where will the flow control system be mounted e.g., on the furnace or away from the furnace. If away from the furnace how far?

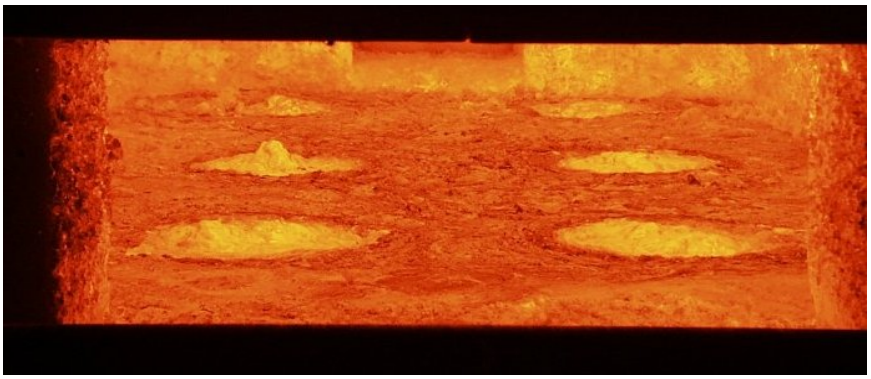

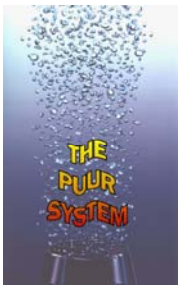

Caperdiff 94BN

POROUS MEDIA FOR ALUMINUM APPLICATIONS

Recommended Service Temperature Limit For
: Aluminum Non-Wetting, °F……3092
: All Other Applications, °F……...3200

Description: Chemically bonded and fired high alumina porous refractory that is aluminum resistant.

TEMPERATURE (ºF)	BULK DENSITY (lb/ft³)	LINEAR CHANGE (%)	MODULUS OF RUPTURE (lb/in²)	COLD CRUSH STRENGTH (lb/in²)	APPARENT POROSITY (%)
70	197.25			17400	17.7
1500					
2000					
2550					

CHEMICAL ANALYSIS (Ignited):

Al_2O_3 ……93.9
SiO_2 ……. 2.4
Fe_2O_3 ……. 0.1
TiO_2 ……. 0.0
CaO ……. 0.2
MgO ……. 0.05
Alkalies …….. 0.30
Cr_2O_3 ……. 1.4

Permeability, cgs ……...0.3
Mean Pore Diameter, microns …..42

Caperdiff 94BN is a high strength product whose chemistry and physical properties have been modified to resist penetration by aluminum yet permit sufficient gas flow for effective treatment of the melt. Caperdiff 94BN can be utilized for inert gas stirring or reactive purging with chlorine.